THOMSON
Television
Basic Service Data

TX_TVD809

F20TF10, F19425
F19426, F19431, F19436
BD20TF10, 13V110TD

Technical Publications
P.O.Box 1976 / Indianapolis, Indiana 46206

SERVICE DATA INDEX

	Page Number
Electrical Alignment Procedures	3-1
Block Diagrams	
Interconnect Diagram (TX809)	8-1
Interconnect Diagram (TVD809)	8-2
Circuit Boards	10-1
Disassembly	
Instrument Disassembly	2-1
Component Removal	2-2
General Information	
Model to Major Assembly Cross Reference	1-3
Safety Precautions	1-2
Schematic Notes	1-4
Specifications	1-3
Schematic Diagrams	
Power Supply	9-1
Deflection	9-2
System Control	9-3
Gemstar	9-4
uP Controller (F19425, F19431)	9-5
Tuner	9-6
Video	9-7
Kine Driver	9-8
Kine Driver (F19425, F19431)	9-9
DVD (Connectors)	9-10
Keyboard/FAV (20V)	9-11
Keyboard/FAV (13V)	9-12
Audio (IF, TVB) (BD20TF10)	9-13
Audio (Output) (BD20TF10)	9-14
Audio (IF, TVB) (13V110TD)	9-15
Audio (Output) (13V110TD)	9-16
Audio (IF, TVB) (F20TF10, F19436, F19431)	9-17
Audio (Output) (F20TF10, F19436, F19431)	9-18
Audio (F19426)	9-19
Audio (F19425)	9-20
Troubleshooting Aids	
Connection Guide	5-1
Lead Dress	5-3
Voltage Charts	5A-1
Yoke Wiring Diagram	7-1

SAFETY NOTICE

USE ISOLATION TRANSFORMER WHEN SERVICING

Components having special safety characteristics are identified by a (⚠) on schematics and on the parts list in this Service Data and its bulletins. Before servicing this instrument, it is important that the service technician read and follow the "Safety Precautions" in the Basic Service Data.

First Edition - First Printing
Copyright 2003 - Thomson Consumer Electronics, Inc.
Printed in U.S.A. - Trademark(s)® Registered - Marca(s) Registrada(s)
AD00001103

SAFETY PRECAUTIONS

DO NOT OPERATE THIS INSTRUMENT OR PERMIT IT TO BE OPERATED WITHOUT ALL PROTECTIVE DEVICES INSTALLED AND FUNCTIONING. SERVICERS WHO DEFEAT SAFETY FEATURES OR FAIL TO PERFORM SAFETY CHECKS MAY BE LIABLE FOR ANY RESULTING DAMAGE, AND MAY EXPOSE THEMSELVES AND OTHERS TO POSSIBLE INJURY.

READ AND COMPLY WITH ALL CAUTION AND SAFETY-RELATED NOTES ON OR INSIDE THE RECEIVER CABINET, AND THE RECEIVER CHASSIS, OR ON THE PICTURE TUBE.

SAFETY GLASSES SHOULD BE USED WHEN SERVICING ELECTRONIC INSTRUMENTS. INADVERTENTLY OVERSTRESSING COMPONENTS MAY CAUSE THEM TO SHATTER, DISCHARGING SMALL PARTICLES.

DESIGN ALTERATION WARNING - Do not alter or add to the mechanical or electrical design of this TV receiver. Design alterations and additions may alter the safety characteristics of this receiver and create a hazard to the user. Design alterations or additions may void the manufacturer's warranty and may make you, the servicer, responsible for personal injury or property damage resulting therefrom.

BEFORE RETURNING AN INSTRUMENT TO THE CUSTOMER, always make a safety check of the entire instrument, including, but not limited to, the following items:

FIRE AND SHOCK HAZARD

1. Never release a repaired unit unless all protective devices such as insulators, barriers, covers, strain reliefs and other protective hardware have been installed in accordance with the original design.
2. Be sure that there are no cabinet openings through which an adult or a child might be able to insert their fingers and contact a hazardous voltage. Such openings include, but are not limited to: (a) spacing between picture tube and cabinet mask, (b) excessively wide cabinet ventilation slots, and (c) an improperly fitted or incorrectly secured back cover.
3. Observe original lead dress. Take care to restore leads to their original dress. Make sure that leads are not in contact with sharp edges or thermally hot parts. Always inspect in all areas for pinched, out-of-place or frayed wiring. Do not change spacing between adjacent components, or between components and printed circuit board. Check the AC power cord for damage.
4. Be certain to remove loose solder balls and all other loose foreign particles.
5. Check components, parts and/or wiring for physical evidence of damage, overheating or deterioration, and replace if necessary. Determine the cause of damage and/or overheating and, if necessary, take corrective action to remove any potential safety hazard.
6. Parts Replacement - Many TV electrical and mechanical parts have special safety-related characteristics, some of which are often not evident from visual inspection, and the protection they give cannot necessarily be obtained by replacing them with components rated for higher voltage, wattage, etc. Parts that have special safety characteristics are identified in this service data by a (⚠) on schematics and in the parts list. Use of a substitute replacement that does not have the same safety characteristics as the recommended replacement part in the service data parts list may create shock, fire and/or other hazards. Always consult the appropriate current service literature for the latest information.
7. Some TV receiver chassis' normally have 85VAC (RMS) between chassis and earth ground, regardless of the AC plug polarity. Some TV receiver chassis' are electrically connected directly to one conductor of the AC power cord. Some TV receiver chassis' have a secondary ground system in addition to the main chassis ground. This secondary ground system is not isolated from the AC power line. The two ground systems are electrically separated by insulating material that must not be defeated or altered. Thus, when servicing any unit always use a separate isolation transformer for the chassis. Failure to use a separate isolation transformer may expose the servicer to possible shock hazard, and may cause damage to servicing instruments.
8. Many electronic products use a polarized AC line cord (one wide pin on the plug). Defeating this safety feature may create a potential hazard to the servicer and the user. Extension cords that do not incorporate the polarizing feature should never be used.

PICTURE TUBE IMPLOSION WARNING - The picture tube in this receiver employs integral implosion protection. For continued implosion protection, replace the picture tube only with one of the same type number.

Do not remove, install, or otherwise handle the picture tube in any manner without first putting on shatterproof goggles equipped with side shields. People not so equipped must be kept safely away while picture tubes are handled. Keep the picture tube away from your body. Do not handle the picture tube by its neck. Some "in-line" picture tubes are equipped with a permanently attached deflection yoke; because of potential hazard, do not try to remove such "permanently attached" yokes from the picture tube.

X-RADIATION AND HIGH VOLTAGE LIMITS - Because the picture tube is the primary source of X-radiation in solid-state TV receivers, it is specially constructed to prohibit X-radiation emissions. For continued X-radiation protection, a replacement picture tube must be the same type as the original. The picture shields, mounting hardware and lenses (projection TV) may also perform an X-radiation protection function, and they must be correctly in place. Anode connectors contain an X-radiation shield - use only the manufacturer's specified anode connectors. High voltage must be measured each time servicing that involves power supply, horizontal deflection or high voltage circuits is performed. Correct operation of the X-radiation circuits must also be confirmed each time these circuits are serviced (X-radiation circuits may also be called "horizontal disable" or "hold-down" circuits). Read and apply high voltage limits and, if the chassis is so equipped, the X-radiation protection circuit specifications. These limits and specifications are given on instrument labels and are included in this service data. High voltage is maintained within specified limits by close-tolerance safety-related components (and adjustments) in the high voltage circuit. If high voltage exceeds specified limits, check each safety related component specified on the schematic and take corrective action.

ANTENNA LEAKAGE RESISTANCE CHECK - With the instrument AC plug removed from the AC source, connect an electrical jumper across the two AC plug prongs. Place the instrument AC switch (if applicable) in the "on" position. Connect one lead of an ohmmeter to the AC plug prongs and touch the other ohmmeter lead, in turn, to each (exposed) antenna input terminal screw and/or coaxial connector. If the measured resistance is less than 1.0 Megohm, or greater than 5.2 Megohm, an abnormality exists which must be corrected before the instrument is returned to the customer. Repeat this test with the AC switch in the "off" position.

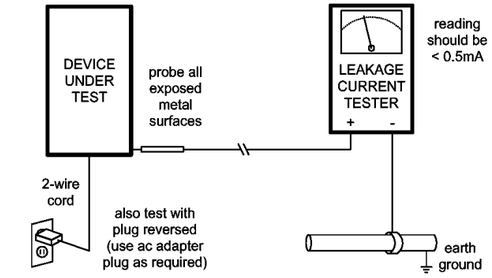

LEAKAGE CURRENT HOT CHECK FOR 2-WIRE OR 3-WIRE GROUNDED CORD SETS - With the instrument completely reassembled, plug the AC line cord into the mains AC outlet at normal line voltage via a non-polarized adapter. DO NOT GROUND THE 3RD PRONG OF THE ADAPTER AND DO NOT USE AN ISOLATION TRANSFORMER. Use a leakage current tester or metering system that complies with American National Standards Institute (ANSI) *C101.1 Leakage Current for Appliances* and with Underwriters Laboratories (UL) *1492 (Section 67)*. With the instrument AC switch first in the "on" position and then in the "off" position, measure from a known earth ground (metal water pipe, conduit, etc.) to all exposed metal parts of the instrument (antennas, handle bracket, metal cabinet, screwheads, metallic overlays, control shafts, etc.). Any current measured must not exceed 0.5 milliampere. Reverse the adapter plug in the outlet and repeat the test. **ANY MEASUREMENTS NOT WITHIN THE LIMITS SPECIFIED HEREIN INDICATE A POTENTIAL SHOCK HAZARD THAT MUST BE ELIMINATED BEFORE RETURNING THE INSTRUMENT TO THE CUSTOMER OR BEFORE CONNECTING THE ANTENNA OR ACCESSORIES.** If a leakage current tester is not available, connect a 1.5 Kohm, 10 Watt resistor, in parallel with a 0.15 µF, 150V capacitor, between earth ground and each exposed metal part of the instrument (as shown above). Use an AC voltmeter with at least 5000 ohm/volt sensitivity to measure the potential across the resistor. The potential measured for any exposed metal surface must not exceed 0.75 volts.

MODEL-TO-MAJOR ASSEMBLY CROSS REFERENCE

KEY TO MAJOR ASSEMBLIES

C1 – Cinch Block Dummy (21120230)

D1– DVD Player

E1 – E/W Correction (21120230)

G1 – Gemstar (21146070)

I1 – IR Interface (2112023A)

K1 – KeyBoard (21120210)

S1 – Sound Compressor (21120230)

CROSS REFERENCE

MODEL/ SERVICE NO.	CHASSIS	MAJOR ASSEMBLIES
BD20TF10	TVD809	D1, E1, G1, I1, K1, S1
F19426	TX809	C1, G1
F19436	TX809	C1, G1
F20TF10	TX809	C1, E1, G1, S1

SPECIFICATIONS (Subject to change without notice)

Power Input: 120 Volts AC 60Hz

Power Consumption: Maximum @ 120VAC
24 watts

Circuit Protection

Fusible Device	Circuit Protected	Physical Location
FP01 (2.5A, 250V)	AC Input	Power Supply PCB, Right Front Chassis

COMPONENT NUMBERING SYSTEM

Serviceability of this chassis is enhanced by road mapping on the top and bottom of the circuit boards. In addition components are generally marked as to their circuit. The operation and features of the "**TX**" chassis is similar to the "**CTC**" series chassis. However the component numbering system is slightly different than in the past. The component numbering for the "**TX**" chassis reflects the component's type and use as to the general circuit areas it is used. The component labeling system is described below:

COMPONENT DESIGNATION: X X xxx

COMPONENT TYPE	CIRCUIT	COMPONENT NUMBER	
B - Connector	A - Audio	01 - 099	Main PCB (top)
C - Capacitor	C - Chroma	500 - 599	Main PCB (bottom)
D - Diode	D - DC-DC Convertor		
F - Fuse	F - Vertical	101 - 199	E/W PCB
I - Integrated Circuit	G - Gemstar		
J - Jumper	H - Tuner	001 - 099	Sound Compressor
L - Transformer/Inductor	I - IF		
P - Variable Resistor	J - Sync Separator	401 - 599	Gemstar PCB
Q - Filter/Crystal	K - Customer Control		
R - Resistor	L - Horizontal		
S - Switch	P - Power Supplies		
T - Transistor	R - System Control		
V - Delay Line	U - Kine Drivers	01 - 99	Kine PCB (top)
	V - Video	500 - 599	Kine PCB (bottom)
	Z - XRP		

EXAMPLES:

TP20 - ***T***ransistor, ***P***ower, 20 (number, top side of Main PCB)
RA543 - ***R***esistor, ***A***udio, 543 (number, bottom side of Main PCB)
CF07 - ***C***apacitor, Vertical, 07 (number, top side of Main PCB)
IR501 _ ***I*****Integrated Circuit**, System Control, 501 (number, bottom side of Main PCB)

SCHEMATIC NOTES

1. Resistor values are in ohms (R = 1, K = X1,000; Meg = X1,000,000). Tolerance is 5%, unless otherwise specified.
   Example: 1R5 = 1.5 ohm, 270R = 270 ohm, 2K7 = 2700 ohm, 1M5 = 1500000 ohm
2. Capacitor values 1.0 and above are in picofarads; values less than 1.0 are in µF, unless otherwise specified.
3. DC voltages measured with NTSC color bar signal applied (via RF channel 3), except for audio voltages, which are measured with MTS stereo 1KHz signal applied. Voltages in parentheses ( ) indicate standby mode.
4. Waveforms measured with NTSC color bar signal applied (via RF channel 3), except for audio waveforms, which are measured with MTS stereo 1KHz signal applied.
5. Special symbols:

< > indicates schematic zone locator
■ indicates wire-wrap stake
indicates jumper wire (top side)
indicates "hot" ground
indicates service test point
indicates connection via point-to-point wire
indicates zero ohm chip (bottom side)
indicates "cold" ground

DISASSEMBLY PROCEDURES

Back Cover Removal

1. Remove five screws to release the back cover. 2 from each side and a small Phillips screw located among the rear audio jacks.
2. Lift the back rear edge of the back cover and pull back to remove.

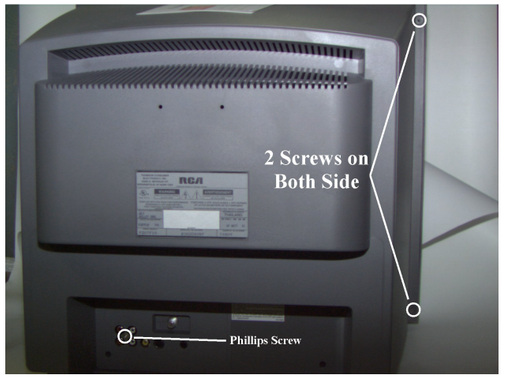

Gemstar Module Removal

1. Remove the back cover.
2. Remove the small screw at the lower back edge of the plastic support.
3. Disconnect the 2 ribbon cables (BG403 & BG 404) from the top of the Gemstar PCB.
4. Lift the Gemstar module straight up and out.

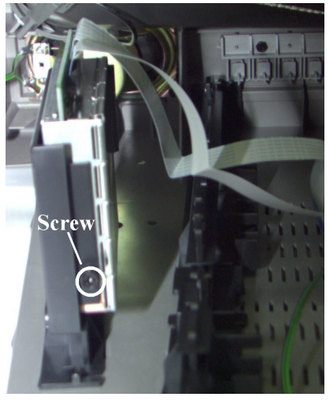

E/W Correction Module Removal

5. Remove the back cover.
6. Remove the small screw at the top center back of the PCB.
7. Disconnect the 2 cables (BL108 & BL103) from the E/W Correction PCB.
8. Raise the 2 tabs at the top of the plastic holder and pull the top of the PCB clear of the tabs. Lift the module straight up and out.

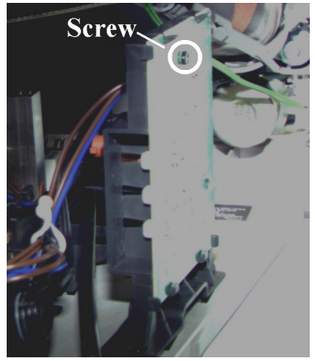

Main Chassis PCB Removal

9. Disconnect the AC power cable.
10. Remove the back cover.
11. Discharge the anode lead to the picture tube ground strap and remove the anode lead before disconnecting other cables.
12. Disconnect cable assemblies P1402, P3101, P3203, P3401 and P4010 from the Main PCB.

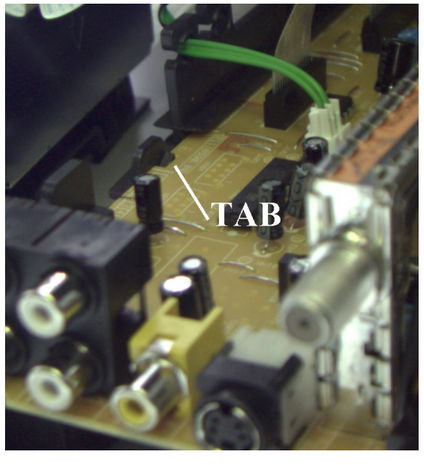

13. Push out on the plastic Tabs on either side of the tray and slide the chassis back and out until clear of the

CHIP COMPONENT REMOVAL

Replacement Procedure for Chip Removal

The following procedures are recommended for the replacement of the chip components used in this unit. Failure to follow these procedures may lead to damage to the copper traces and pads on the printed circuit boards.

1.Preparation for replacement

a. Soldering Iron: Use a pencil-type soldering iron using less than 30 watts.

b. Solder Type: Eutectic Solder, Tin 63%/Lead 37%, is recommended.

c. Soldering Time: Do not apply heat for more than 4 seconds.

d. Preheating: Chip capacitors must be preheated before installation. (130 degrees - 150 degrees C).

Note: Chip component must not be reused after removal. Excessive mechanical stress and rubbing of the component electrode must be avoided.

2. Removing the chip component (Fig. 2-3):

Grasp the chip component body with tweezers and alternately apply heat to both electrodes.

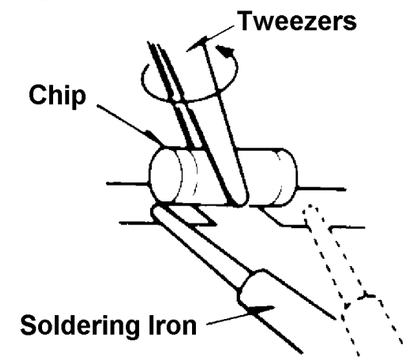

Figure 2-3, Removing Chip Components

When the solder on both electrodes has melted, remove the chip component with a twisting motion.

Note: Do not attempt to lift the component off the board until the component is completely disconnected from the board by a twisting action. ***Attempting to remove the component before it has completely been disconnected can break the copper foil on the printed circuit board.***

3. Installing a chip component

a. Presolder the contact points on the circuit board (Fig. 2-4).

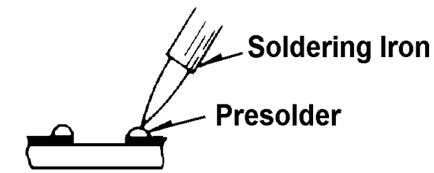

Fig.2-4, Chip Component Presolder

b. Hold the component in position with tweezers and solder the electrodes as shown (Fig.2-3).

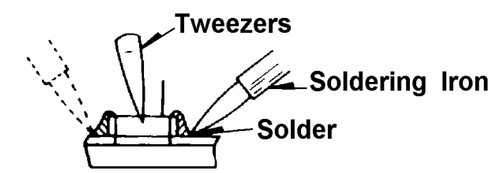

Fig. 2-3 - Chip Component Installation

Note: Do not glue the replacement chip component to the circuit board.

Operating Conditions

Unless otherwise noted, the following conditions must be observed when aligning the TV:

1. Chassis must be operated from a 120 VAC isolation transformer, with line voltage set to 120 VAC.
2. All voltages and waveforms referenced are with respect to Ground
3. Set Picture Quality controls at nominal (Brightness Saturation at 50% and Contrast at 70%) by using the remote control and pressing "Menu" and select:

→ "2. Picture Quality"
→ "2. Picture Resets"
→ "2. Normal Lighting"

4. A 10X probe must be used for oscilloscope and frequency measurements.
5. Minimum warm-up time is 10 minutes.

Required Test Equipment

Isolation Transformer:

Digital Voltmeter: Range .1V DC to 1000V DC, Accuracy: ± .5%/

DC Voltage Supply: Range: 0 to 50V, 2A—Well Filtered

Temperature Controlled Soldering Station: Grounded Tip Type—Tip Temperature 500F to 800F Adjustable

NTSC Video Signal Generator: Must provide 1V-P-P Negative Sync, Video into 75-OHM input. Produce, standard NTSC 75% Saturated Color Bars with 100% White Window. (B&K 1249, or equivalent)

RF Signal Generator: 100 kHz to 150 MHz .1V RMS, Int. Mod. 1KHz 30%

Cross Hatch Generator: Must have RF output.

Dual Trace, Delayed Sweep Oscilloscope: 25 MHz with Channel invert capability. Sensitivity' 5m/V/cm Maximum Sweep Rate: .1us/cm.

POWER SUPPLY ALIGNMENT

1. Insure that input voltage is at 120 VAC, 60Hz.
2. Check that the values RP54, RP56, RP58 and RP59 are the proper values. Connect a voltmeter to "UB" and switch on the set. Voltmeter should indicate that "UB" below 135V. If the voltage at "UB" exceeds 135V, turn the set off immediately and check the values of the power supply circuit components. With "UB" less than 125V proceed to the next step.
3. Tune the set to a channel with a good picture.
4. Set Picture Quality controls at nominal (Brightness Saturation at 50% and Contrast at 70%) by using the remote control and pressing "Menu" and select:

→ "2. Picture Quality"
→ "2. Picture Resets"
→ "2. Normal Lighting"

5. Adjust PP01 (F7) so that the voltage at "UB" is **118.0V+/- 1V.**
6. Adjust controls VG2 and Focus on the IHVT (LL05) for a normal picture.
7. Allow the set to warm up for at least 3 minutes.
8. Set brightness, contrast and volume to minimum.
9. The "UB" voltage should be **118.0V+/-1.5V**. If not go back to step1 and re-align the power supply.

TV Service Mode

The service mode is provided to facilitate instrument alignment and service adjustments. The service mode is accessed by pressing a three-button combination on the front control panel of the instrument.

Using the Front Panel Controls to enter Service Mode

1. Turn on the TV and select the channel that will be used for the alignment procedure.
2. With the instrument "ON" press and hold the "**VOL −** " button and then the "**CH+**" button, then press and release the "**POWER**" button.
3. The TV set should immediately display a line menu on the bottom of the screen (see below).

P X 0 V XXX
S X.XX 4

Service Mode Screen

The Parameter (**P**) number is on the left side of the display and represents the parameter that will be adjusted. The Value (**V**) is on the right side of the display and represents the decimal value stored for the function selected. Once the Service Mode Security Code has been entered the **CH** /\ and **CH** \/ buttons on the front panel (or the remote transmitter) are used to change the parameter (**P**) number. The **VOL** + and **VOL** - buttons are used to change the decimal value (**V**) of the function.

NOTE: When the service mode is accessed, the parameter will be "0". Parameter "0" is used to input the security code. The security code is necessary to protect the factory alignments from inadvertent modification. Attempting to change the parameter (**P**) using **CH** /\ or **CH** \/ before the proper security code has been entered will cause the instrument to exit the service mode. A valid security code is entered (using **VOL** + or **VOL** -). The group of XX's on the second line in the center of the service menu display the software version of the code.

Security Codes

When the Service Mode is first entered, the parameter (**P**) will come up set at "0", which corresponds to the security code function.

1. Turn on the TV and select the channel that will be used for the alignment procedure and access the service mode menu.
2. With the parameter (**P**) set to "0" adjust the value (**V**) (using **VOL** + or **VOL** -) to **76** for access to the Front Panel Service Mode.
3. Once the security code has been set, individual alignments can be accessed by pressing **CH** /\ or **CH** \/ changing the parameter (**P**) number.
4. Once a parameter (**P**) has been selected for a particular alignment the **VOL** + and **VOL** - buttons can be used to change the value (**V**) of the alignments selected. Parameters available through the front panel are shown in table
5. To exit the service menu, press "**POWER**" on the remote control or front panel.

P 0 0 V 76
S X.XX 4

Security Code Entry

Parameter #	Parameter name	Value range	Notes and comments
00	security number	Must be 076	Must not advance to other parameters until value set
04	VCO	127(Mono only)	
05	AGC	31 (Stereo) 63 (Mono)	
06	Red cut-off	255	
07	Green cut-off	255	
08	Blue cut-off	255	
09	Green Gain	255	
10	Blue Gain	255	
11	Peak white	52	
12	Horizontal phase	31	
13	Vertical phase	15	
14	Vertical amplitude	63	
15	Decoder Input Level	63	
16	Decoder _stereo VCO,	63	
17	Decoder Filter Setting,	63	
18	Decoder_Low_Band,	63	
19	Decoder_High_Band,	63	
20	Decoder_SAP_VCO,	63	
21	S-Video Feature	0 - Disable 1 - Enable	TX809 Stereo Model Only
22	Speaker On/Off Feature	0 - Disable 1 - Enable	TX809 Stereo Model Only
23	Sound Logic Feature	0 - Disable 1 - Enable	TX809 Stereo Model Only
24	Auto Tuning Feature	0 - Disable 1 - Enable	TX809 Stereo Model Only
25	Gemstar OSD Horizontal	185	
26	Gemstar OSD Vertical	160	

Table 1.

Note: *Before adjusting any parameters access all the parameters and write down the initial value for each. This will allow you to return to a "known" value if you encounter problems with the alignment.*

RF AGC

Test Point:	Observe Display	
Adjust:	AGC (P5)	Range 0 - 31

The RF AGC has been preset at the time of manufacture for optimum operation over a wide range of input signal conditions. Readjustment ***should not*** be required unless the tuner, IC IV01 or IC IR01 has been replaced. Adjustment of the RF AGC parameters may not have any visible effect except under unusual conditions. Adjusting the RF AGC to one extreme of it's parameter limits will usually provide a relatively poor signal to noise ratio, while adjustment to the other extreme of it's parameter limits will cause overload conditions such as channel 6 color beats or Cable TV adjacent channel interference. If the RF AGC parameter setting is adjusted, check all local channels for proper operation. Use the weakest local channel to adjust RF AGC parameter setting.

Note: The instrument's channel can be changed by entering a channel number using the digit buttons on the remote control.

1. Tune TV to weakest local station.
2. Access the service menu and select AGC alignment parameter (05).
3. Make a note of the value setting prior to making any adjustments. This so that you may reset the parameter to that value if no visible difference is detected when adjusting from one extreme of the parameter limits to the other.
4. Adjust the value of the AGC alignment parameter (05) to a value where the weakest viewable channel is no longer visible and a gray screen is displayed (Unusable Signal) or to the maximum parameter value setting where the picture quality is degraded the most (loss of color, snow or other visible defects).
5. Adjust the value of the AGC alignment parameter (05) to a value where the weakest viewable channel is now displayed and further adjustment of the parameter no longer improves the picture quality.
6. Check all local channels for proper operation with the new setting.

Picture Quality Alignment

SCREEN ADJUSTMENT

Test Point:	Observe Display	
Adjust:	SCREEN (VG2)	IHVT

1. Tune the instrument to receive a gray scale stairstep signal. **Note:** Some generators produce gray scale stairsteps by using the color bars signal with the color burst turned off. This produces bars that step from Black (7.5IRE) to White (77IRE).
2. Set Picture Quality controls at nominal (Brightness Saturation at 50% and Contrast at 70%) by using the remote control and pressing "Menu" and select:

→ "2. Picture Quality"
→ "2. Picture Resets"
→ "2. Normal Lighting"

3. Adjust the SCREEN (VG2) until the first gray scale bar (7.5 IRE) is just visible.

PEAK WHITE ADJUSTMENT

Test Point:	TU51, 61, 71 Collector	Kine PCB
Adjust:	Peak White	Range: 0 - 52

1. Tune the instrument to receive a gray scale stairstep signal.
2. Set Picture Quality controls at nominal (Brightness Saturation at 50% and Contrast at 70%) by using the remote control and pressing "Menu" and select:

→ "2. Picture Quality"
→ "2. Picture Resets"
→ "2. Normal Lighting" "

3. Measure the collector voltage of TU51, 61, and 71. Use the collector of the transistor with the highest peak-peak voltage for this adjustment.

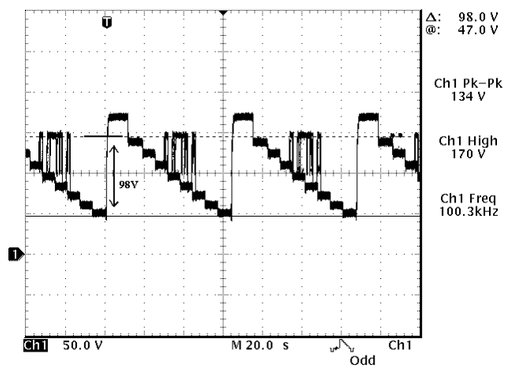

4. Place the instrument in the **TV SERVICE MODE.**
5. Select the "PEAK" adjustment and adjust the value to obtain 98V +/- 2V between the blanking and White level.

Color Temperature Adjustment

Test Point:	Observe Display		
Adjust:	Red cut-off	(P06)	Range: 0 - 255
	Green cut-off	(P07)	Range: 0 - 255
	Blue cut-off	(P08)	Range: 0 - 255
	Green Gain	(P09)	Range: 0 - 255
	Blue Gain	(P10)	Range: 0 - 255

NOTE: Allow the instrument to warm up for at least 15 minutes before doing the Color Temperature Adjustments. This compensates for color drift in the instrument as it warms to run temperature.

1. Tune the instrument to receive a gray scale stairstep signal.
2. Set Picture Quality controls at nominal (Brightness Saturation at 50% and Contrast at 70%) by using the remote control and pressing "Menu" and select:

→ "2. Picture Quality"
→ "2. Picture Resets"
→ "2. Normal Lighting"

3. Put the instrument into **TV SERVICE MODE**.
4. Adjust Green Gain (P09) to 128 and adjust Blue Gain (P10) to 128.
5. Adjust Red cut-off (P06) value to mid -point (128).
6. Adjust Green cut-off (P07) value to zero (0).
7. Adjust Blue cut-off (P08) to produce magenta in the first few steps of the scale.
8. Adjust Green cut-off (P07) to produce gray tone on the first few steps of the scale. Readjust Red cut-off and Blue cut-off if necessary to produce best gray tone.
9. Adjust Green Gain (P09) and Blue Gain (P10) for best white level on the last steps of the gray scale.

FOCUS ADJUSTMENT

Test Point:	Observe Display	
Adjust:	Focus Control	IHVT

1. Tune the instrument to receive a crosshatch signal.
2. Set Picture Quality controls at nominal (Brightness Saturation at 50% and Contrast at 70%) by using the remote control and pressing "Menu" and select:

→ "2. Picture Quality"
→ "2. Picture Resets"
→ "2. Normal Lighting"

3. Adjust the *Focus* control (LL05) for best overall focus.

Picture Geometry Adjustment

Horizontal Phase Adjustment

Test Point:	Observe Display	
Adjust:	PL140	Full CCW
	Horizontal Phase (P12)	Range: 0 - 31

1. Using a signal generator tune the instrument to receive a crosshatch or other pattern that can be easily centered horizontally.
2. Set Picture Quality controls at nominal (Brightness Saturation at 50% and Contrast at 70%) by using the remote control and pressing "Menu" and select:

→ "2. Picture Quality"
→ "2. Picture Resets"
→ "2. Normal Lighting"

3. On the E/W Correction Board adjust PL140 full Counter-Clock-Wise (CCW).
4. Access the service menu and select Horizontal Phase alignment parameter (P12).
5. Adjust value range to center picture horizontally (side to side) use "VOL +" button to increase value range and use "VOL -" button to decrease value range.

Vertical Adjustments

Test Point:	Observe Display	
Adjust:	Vertical Phase (P13)	Range: 0 - 15
	Vertical Amplitude (P14)	Range: 0 - 63

1. Tune the instrument to receive a crosshatch pattern.
2. Put the instrument into **TV SERVICE MODE**.
3. Adjust Vertical Amplitude (P14) so that both the top and bottom of the crosshatch pattern can be viewed.
4. Adjust Vertical Phase (P13) to center the display, using the top and bottom edges of the crosshatch as a reference.
5. Adjust Vertical Amplitude (P14) so that the top and bottom lines of the crosshatch pattern are an equal distance from the edge of the screen. Adjust so that approximately 3.75% of the crosshatch pattern is hidden at both the top and bottom of the display (7.5% over scan +/- 2.5%)

EXAMPLE: If the crosshatch display has 12 blocks vertically, adjust so that ~ 1/2 block is hidden at both the top and bottom of the display (0.5/12 = 4.1%).

6. If necessary repeat the vertical adjustments to get the proper overscan symmetry.

E/W Correction

Test Point:	Observe Display	
Adjust:	E/W Horizontal	PL140
	E/W Pincushion	PL141
	E/W Trapezium	PL143
	Horizontal Phase (P12)	Range: 0 - 31

1. Tune the instrument to receive a crosshatch pattern.
2. On the E/W Correction Board adjust PL140 full Counter-Clock-Wise (CCW).
3. Adjust PL140 (Horizontal Amplitude) so that the sides of the crosshatch pattern are an equal distance from the edge of the screen. Adjust so that approximately 4.5% of the crosshatch pattern is hidden at both sides of the display (9.0% over scan +/-3%)

EXAMPLE: If the crosshatch display has 15 blocks horizontally, adjust so that ~ 3/4 block is hidden at both sides of the display (0.75/15 = 5.0% X 2 + 10%).

4. Adjust PL141 (Pincushion Correction) on the E/W Module so that the vertical lines on the sides of the crosshatch pattern are straight.
5. Adjust PL143 (Trapezoid adjustment) on the E/W Module so that the vertical lines on either side of the crosshatch pattern are parallel to the sides of the screen.
6. Put the instrument into **TV SERVICE MODE.**
7. Adjust the Horizontal Phase (P12) range to center picture horizontally.

GEMSTAR

Gemstar Positioning

Test Point:	Observe Display		
Adjust:	OSD Horz.	(P25)	Range: 0 - 185
	OSD Vertical	(P26)	Range: 0 – 160

Note: The OSD for Gemstar is not intended to need any alignment. This alignment should only be performed if the Gemstar module is repaired or replaced.

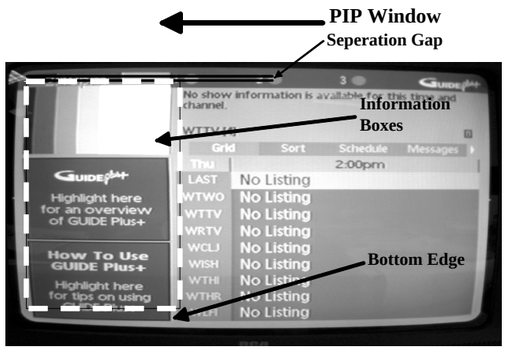

Guide Plus+ Menu

1. Tune to a RF channel that carries Gemstar Plus+ information in the Vertical Blanking Interval (VBI).
2. Press "**Guide**" on the remote control to access the Guide Plus+ menu shown above. Familiarize yourself to the layout of the Menu screen. The Gemstar alignments control the positioning of entire Guide Menu.
3. Access the Service Menu. This action will remove the Guide Menu.
4. Go to parameter #25, Gemstar horizontal position. Adjust the value by one in either direction. This will bring up the Gemstar Diagnostic Screen. Adjust the horizontal centering of the Gemstar display so that the distance from the edge of the color bars to the edge of the tube is the same on both the left and right sides of the display.

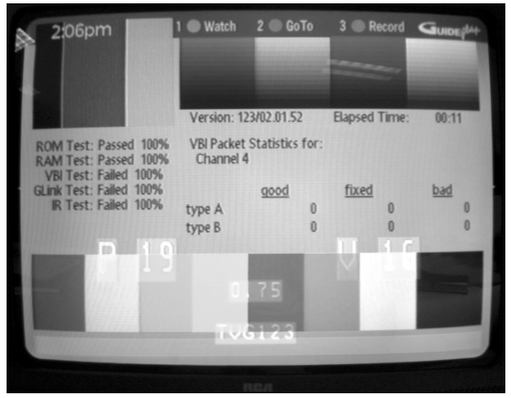

Gemstar Diagnostic Screen

1. Go to parameter #26, Gemstar vertical position. Adjust the vertical centering of the Gemstar display so that the distance from the upper edge of the PIP window to the top edge of the tube is the same distance as the distance from the bottom of the blue bar to the bottom edge of the display.

Left Intentionally Blank

HR02-BG404

—
PG
CC VIDEO
PWM(AUDIO)
IR_CLK
IR_DATA
DVD_CMD_READY
RESET
EEPROM_WE
BURST
SR
IR/G LINK
I²C DATA_EVER
I²C CLK_EVER
+5VE
GND

HR01 –BG403

+5VE
R OSD
GND
G OSD
VSYNC
B OSD
HSYNC
FB OSD
IR IN
I²C CLK_EVER
FAULT
I²C DATA_EVER
SND-OGIC_A/D
SYNC DET
KEYDET2
KEYSEL 1
KEYSEL 2
ECO
KEYSEL 3

BA005 -> SPK R
BA006 -> SPK L

HV06 – BV05

GND
CINCH_VIDEO IN

HA003 – HA003A

SPK L OUT
SPEAKER L
GND
SPK R OUT
SPEAKER R

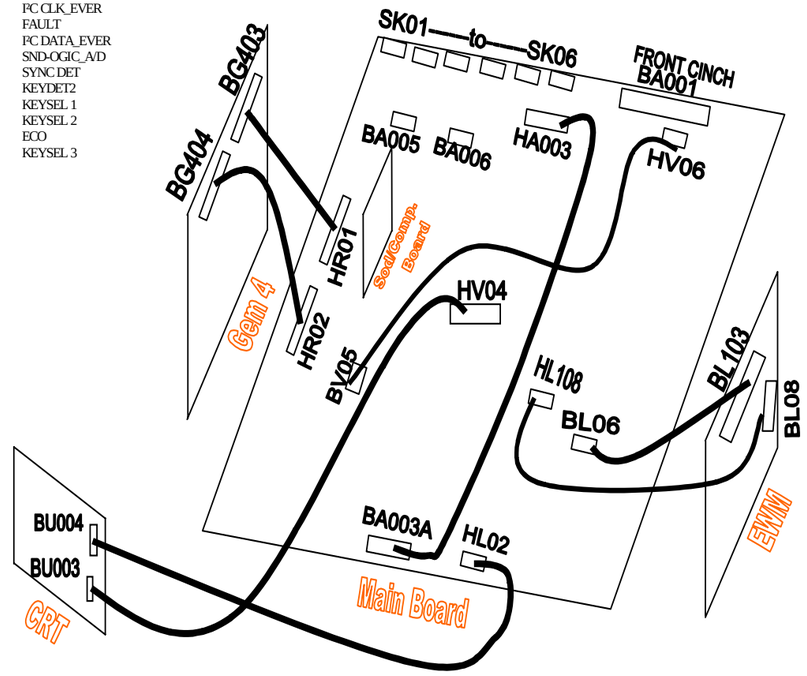

HL02–BU004

+160V
HTR
HTR GND
GND

HV04–BU003

9VE
GND
B
G
R
GND

BL06 – BL103

+24V/DG1
GND
UB/EWD

BL08 – HL108

VPRBL
VRAMP
GND
FAULT

TX 809

HR02-BG404

—
PG
CC VIDEO
PWM(AUDIO)
IR_CLK
IR_DATA
DVD_CMD_READY
RESET
EEPROM_WE
BURST
SR
IR/G LINK
I²C DATA_EVER
I²C CLK_EVER
+5VE
GND

HR01 – BG403

+5VE
R OSD
GND
G OSD
VSYNC
B OSD
HSYNC
FB OSD
IR IN
I²C CLK_EVER
FAULT
I²C DATA_EVER
SND-LOGIC_A/D
SYNC DET
KEYDET2
KEYSEL 1
KEYSEL 2
ECO
KEYSEL 3

BK03 – BV05

GND
CINCH_VIDEO IN

HR81 – BK225

GND
I2C_DATA_EVER
I2C_CLK_EVER
GND
IR_DVD
GND
DVD_ CMD_ RDY
NO CONTACT

BK02 – BA004

CINCH _AUD-IN L
GND
CINCH _AUD-IN R
SPK L OUT
SPK L
AUDIO – V
SPK R OUT
SPK R

BK01 – HR05

+5V
GND
N. C.
KEYSEL3
KEYDET2
KEYSEL2
KEYSEL1
POWER_ LED
IR IN
GND

BA005 -> SPK R
BA006 -> SPK L

BP10 – BW101

12VE X2
8VS
CTRL
4VE X2
GND X 4
PG
-5VE
5VS

BL06 – BL103

+24V/DG1
GND
UB/EWD

BL08 – HL108

VPRBL
VRAMP
GND
FAULT

HA003 – HA003A

SPK L OUT
SPEAKER L
GND
SPK R OUT
SPEAKER R

BA200-BA003

DVD_L_Audio
GND
DVD_R_Audio
GND

HR80- HR04

+5VE
I2C_DATA_EVER
I2C_CLK_EVER
GND
IR CLK
GND
DVD CMD RDY
IR DATA

HL02–BU004

+160V
HTR
HTR GND
GND

HV04–BU003

9VE
GND
B
G
R
GND

BY217-HR03

DVD_'C'
GND
DVD_'Y'
GND
N.C.
GND

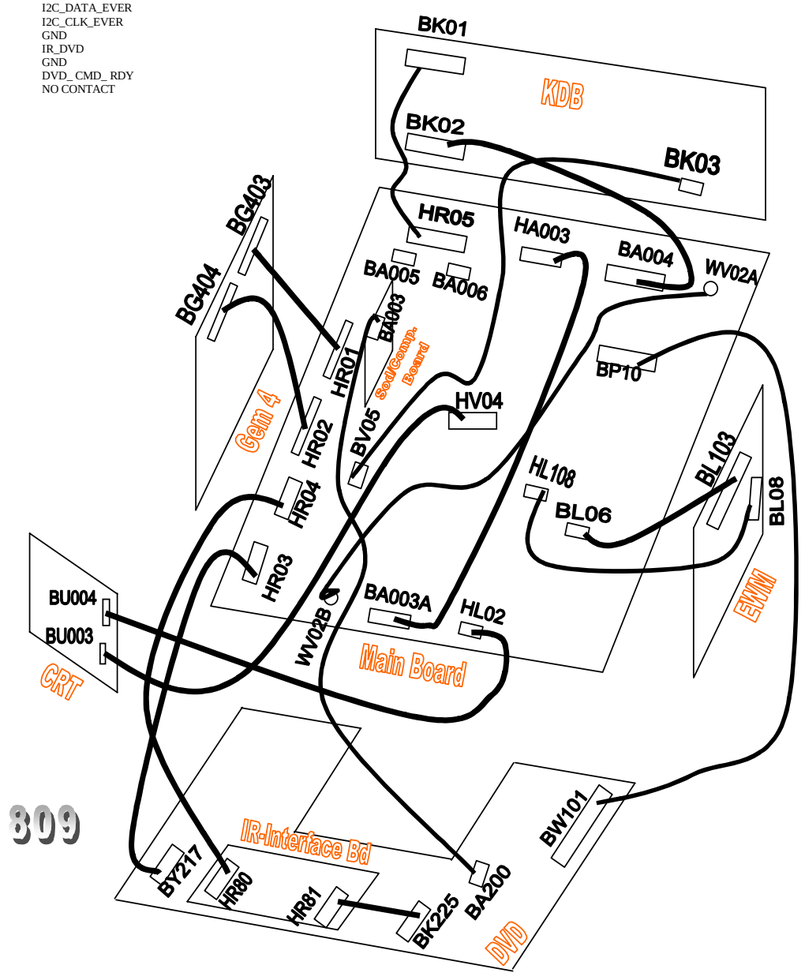

TVD 809

High Voltage Lead Dress

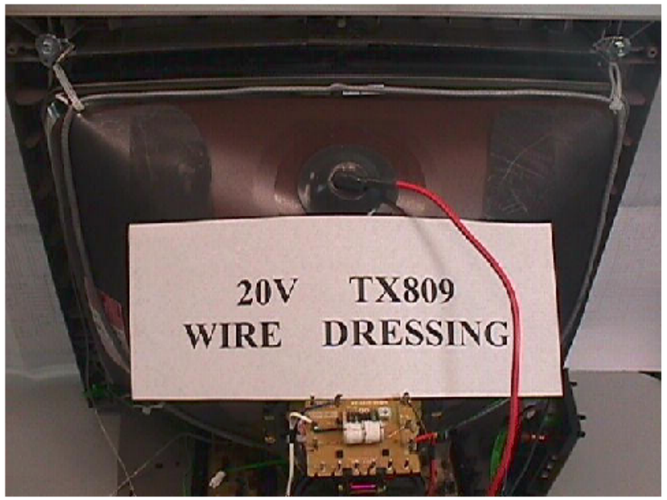

Speaker Cable Lead Dress 1 of 2

Speaker Cable Lead Dress 2 of 2

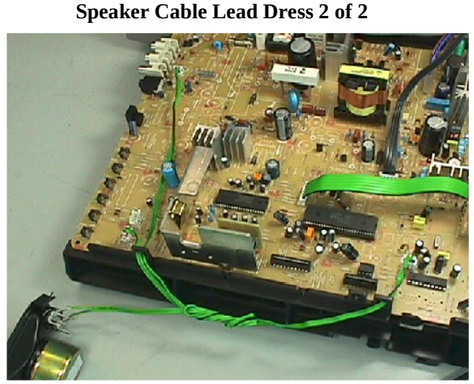

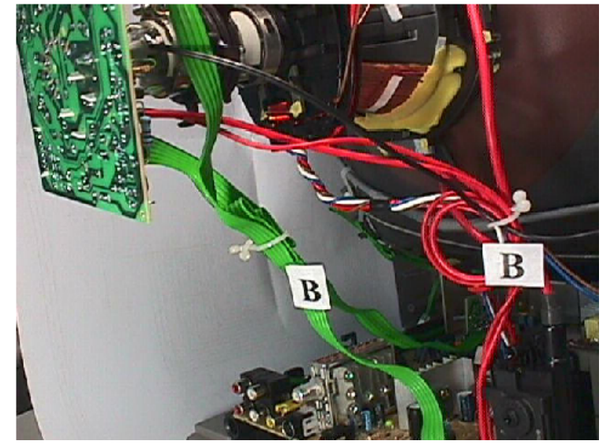

CRT& HV Lead Dress

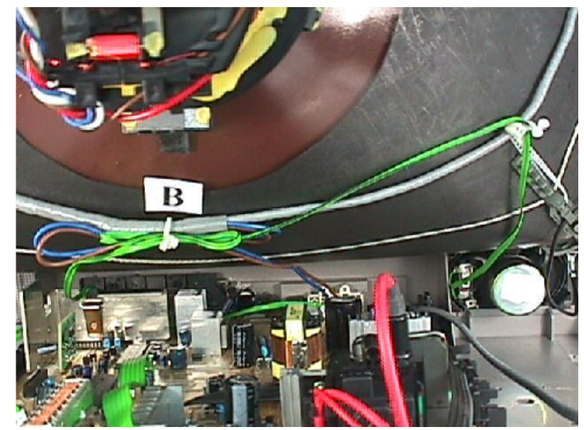

Speaker and Degauss Lead Dress

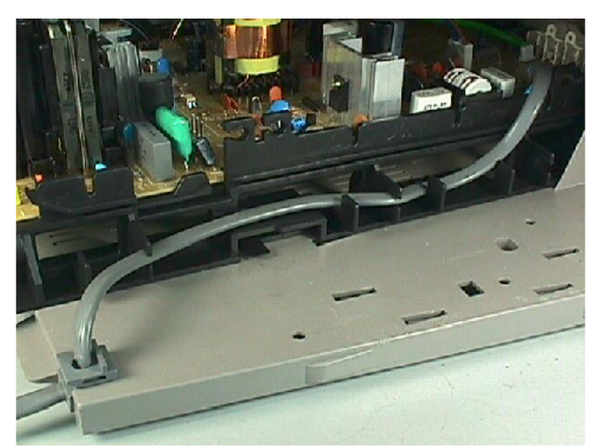

AC Cable Lead Dress

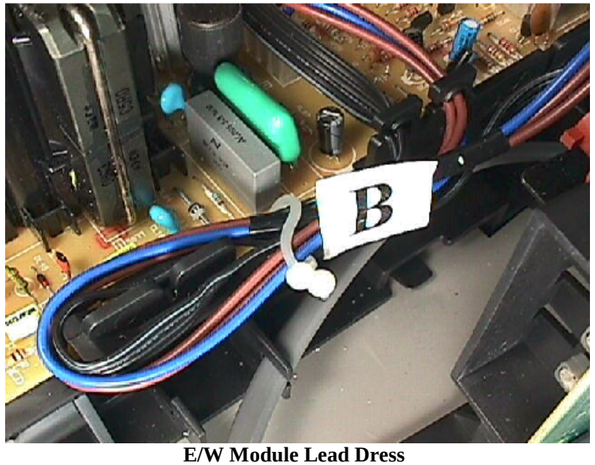

E/W Module Lead Dress

Left Intentionally Blank

FROSIN Power Supply Output Voltages

Conditions

TV on: Picture Color Bar

Brightness - 50%

Color - 50%

Contrast - 50%

Volume - 1/8 Sound power.

TV ON mode

Supply	Min	Norm	Max	Unit
UB	114	115	116	VDC
UA	11	11.5	12	VDC
14V	12.0	13.0	14.5	VDC
12VE	11.0	12.2	14	VDC
9VE	8.5	8.9	9.5	VDC
9VS	8.5	8.9	9.5	VDC
9VS2	8.5	8.9	9.5	VDC
8VS	7.5	8.1	8.5	VDC
+5VE	4.85	5.1	5.35	VDC
-5VE	-5	-5.4	-6	VDC
5VS	4.85	5.5	6	VDC
4VE	4	5.5	6	VDC

Conditions

DVD on: Play

DVD ON mode

Supply	Min	Norm	Max	Unit
UB	114	115	116	VDC
UA	11	11.5	12	VDC
14V	12.0	13.0	14.5	VDC
12VE	11.0	12.2	14	VDC
9VE	8.5	8.9	9.5	VDC
9VS	8.5	8.9	9.5	VDC
9VS2	8.5	8.9	9.5	VDC
8VS	7.5	8.1	8.5	VDC
+5VE	4.85	5.1	5.35	VDC
-5VE	-5	-5.4	-6	VDC
5VS	4.85	5.5	6	VDC
4VE	4	5.5	6	VDC

Conditions

TV OFF (AC connected):

Standby mode

Supply	Min	Norm	Max	Unit
UB	134	135	136.5	VDC
UA	18	18.5	19	VDC
14V	13.5	14.3	14.7	VDC
12VE	11.7	12.2	12.7	VDC
9VE	8.5	8.9	9.5	VDC
9VS	---	---	---	VDC
9VS2	---	---	---	VDC
8VS	---	---	---	VDC
+5VE	4.85	5.1	5.35	VDC
-5VE	-5	-5.3	-6	VDC
5VS	---	---	---	VDC
4VE	7.3	7.8	8.3	VDC
Standby Power	11	12.5	13	Watts

TX_TVD809
Voltage Chart (Power Supply)

Left Intentionally Blank

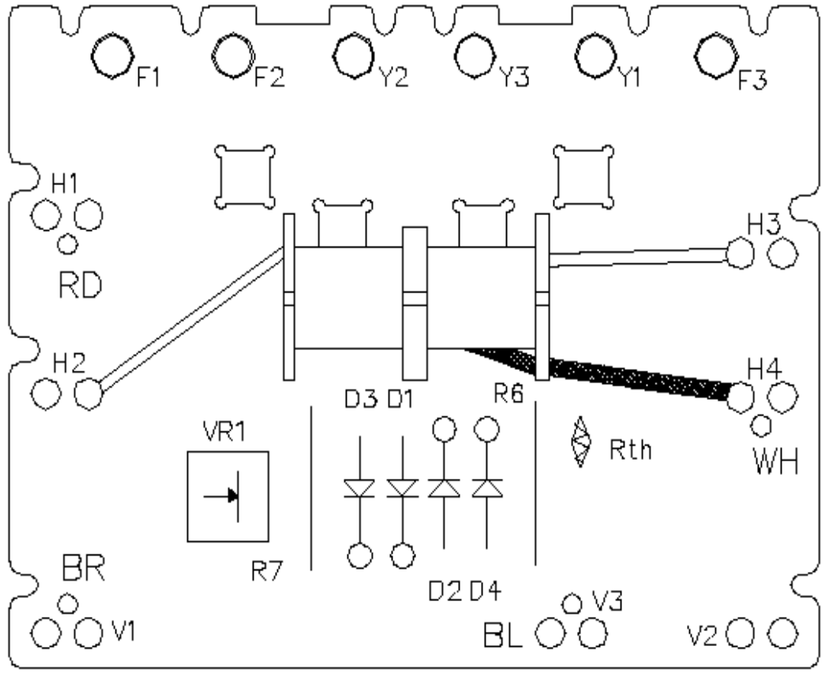

TERMINAL BLOCK

HORIZONTAL COIL

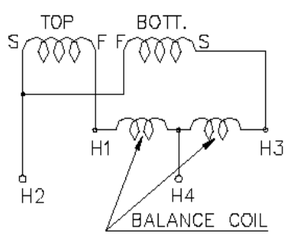

VERTICAL COIL

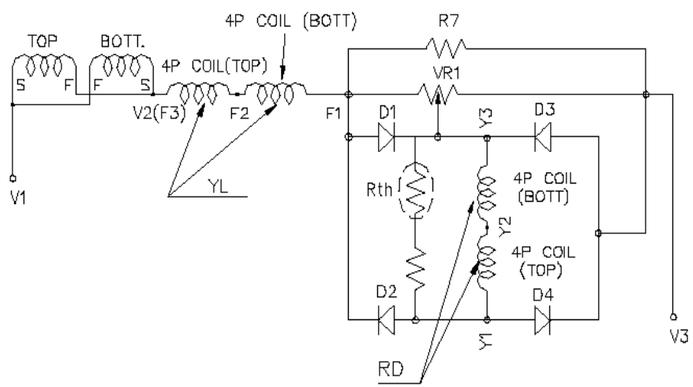

WIRING CONNECTION

Left Intentionally Blank

Interconnect Drawing

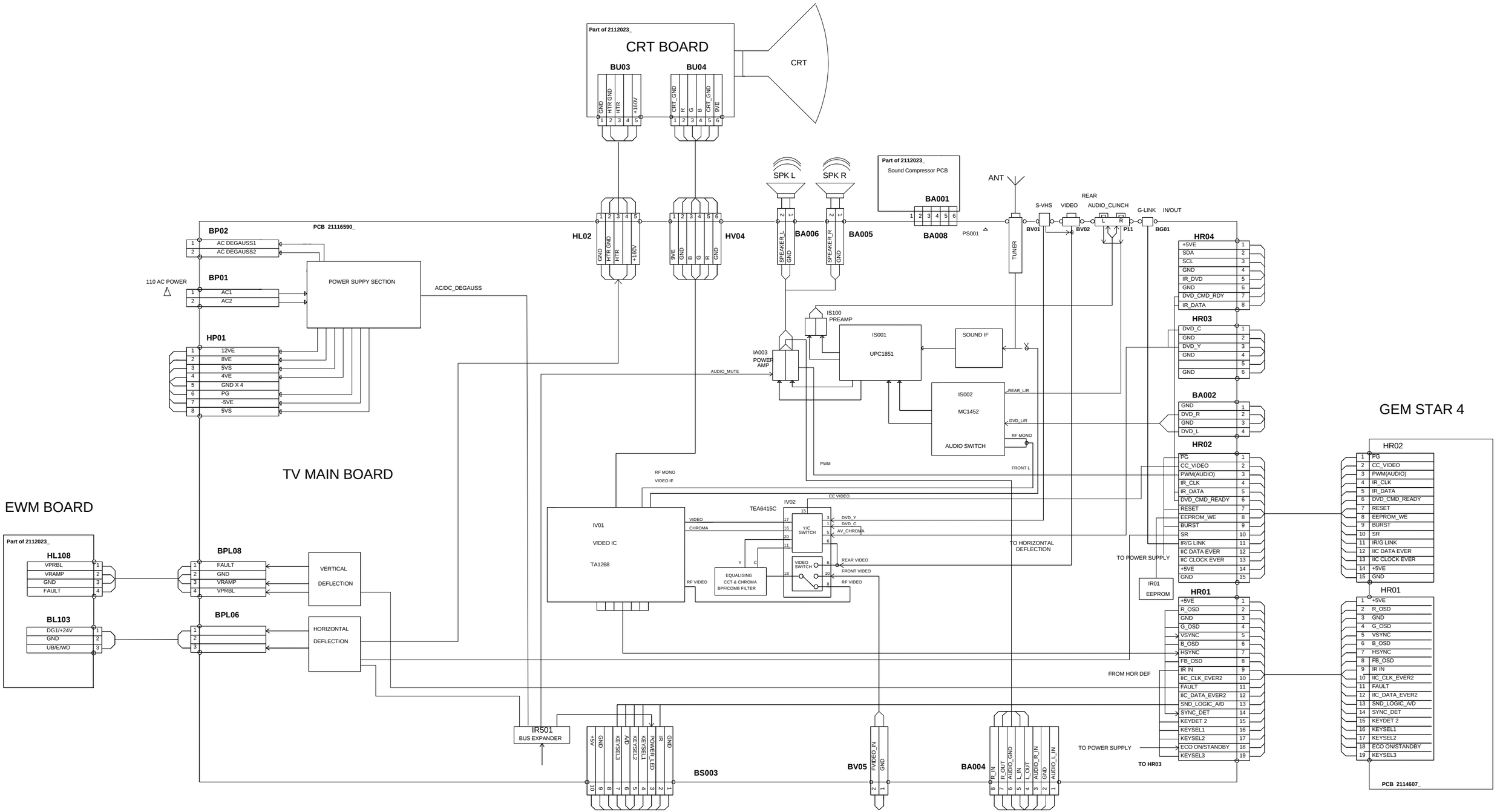

GEM STAR 4

PAGE 8-1

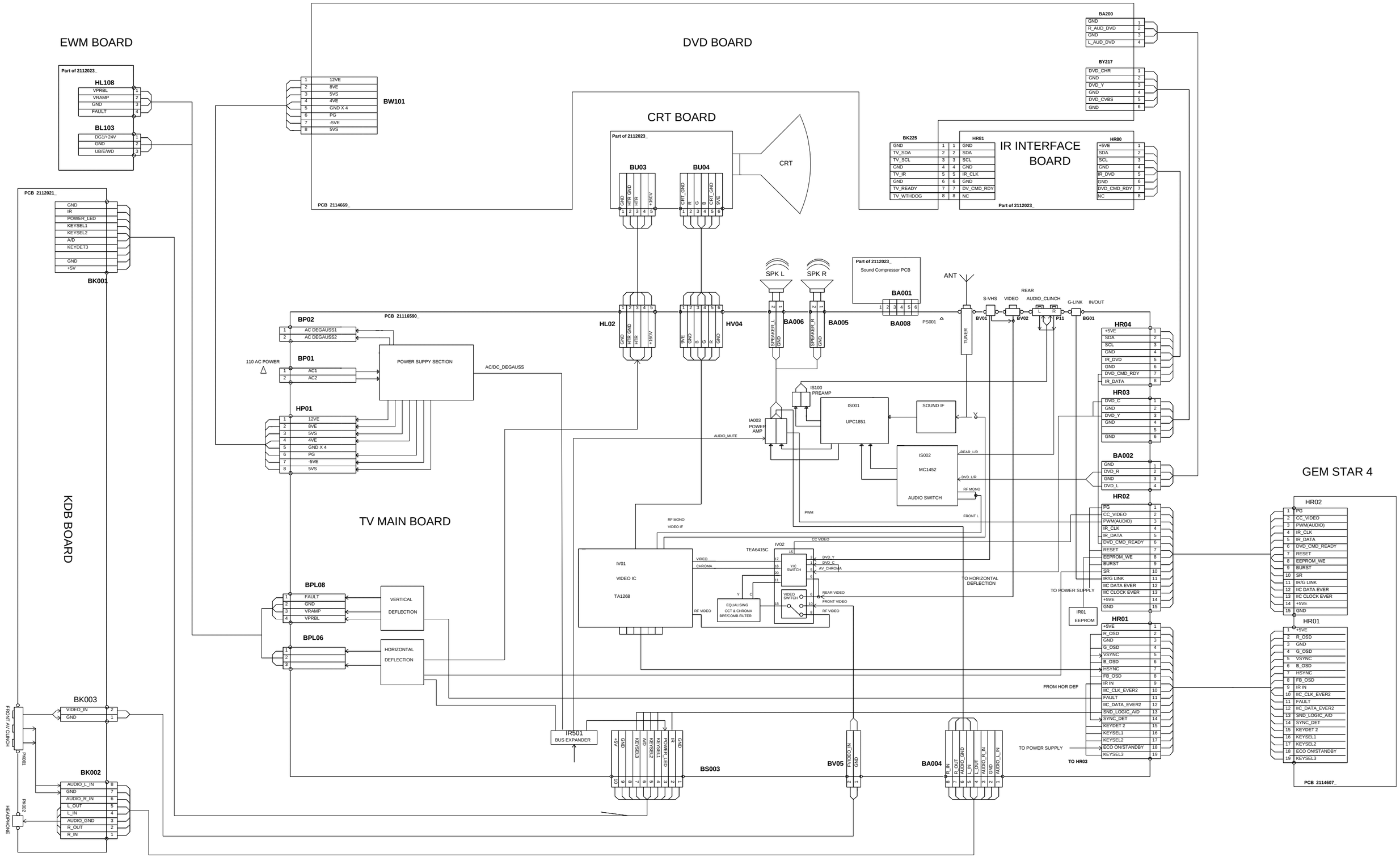
EWM BOARD
DVD BOARD
CRT BOARD
CRT
IR INTERFACE BOARD
KDB BOARD
TV MAIN BOARD
GEM STAR 4
HL108
BL103
BW101
BU03
BU04
BK225
HR81
HR80
BA200
BY217
BK001
BP02
BP01
HP01
BPL08
BPL06
BK003
BK002
HL02
HV04
BA006
BA005
BA001
BA008
SPK L
SPK R
ANT
TUNER
S-VHS
VIDEO
AUDIO_CLINCH
G-LINK
IN/OUT
BV01
BV02
P11
BG01
HR04
HR03
BA002
HR02
HR01
POWER SUPPY SECTION
110 AC POWER
AC/DC_DEGAUSS
IS100 PREAMP
IS001 UPC1851
SOUND IF
IA003 POWER AMP
IS002 MC1452 AUDIO SWITCH
IV01 VIDEO IC TA1268
TEA6415C
IV02
Y/C SWITCH
VIDEO SWITCH
EQUALISING CCT & CHROMA BPF/COMB FILTER
VERTICAL DEFLECTION
HORIZONTAL DEFLECTION
IR501 BUS EXPANDER
BS003
BV05
BA004
IR01 EEPROM
TO HORIZONTAL DEFLECTION
TO POWER SUPPLY
FROM HOR DEF
TO HR03
PCB 2114669_
PCB 21116590_
PCB 2114607_
Part of 2112023_
PCB 2112021_
Sound Compressor PCB
FRONT AV CLINCH
HEADPHONE

PAGE 8-2

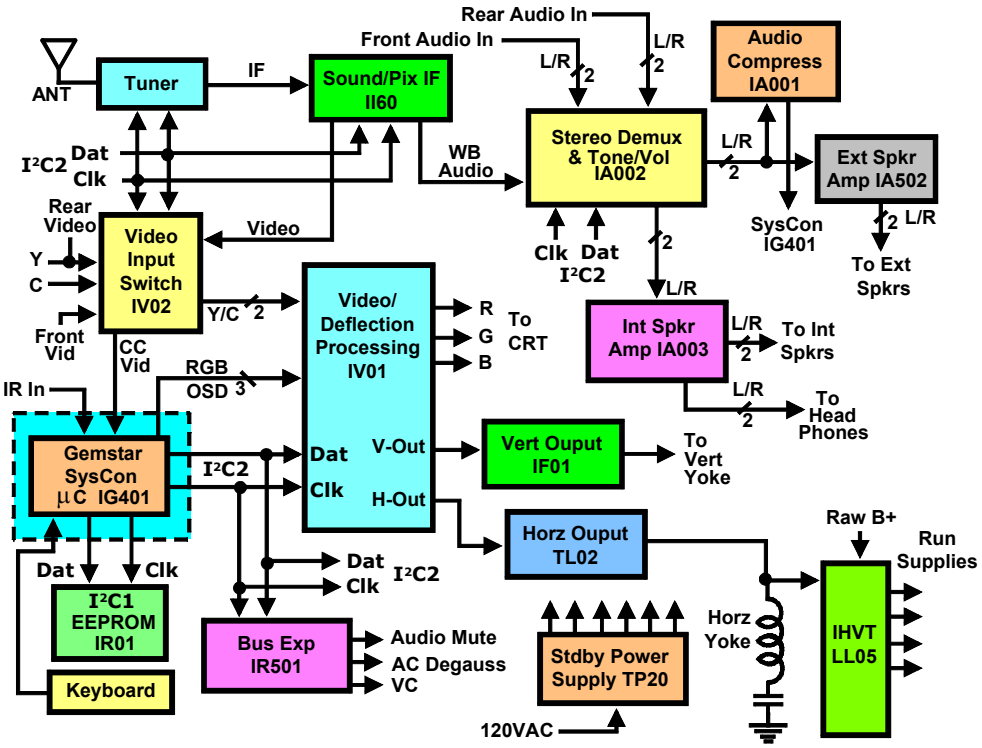

TX809 Simplified Block Diagram

TX809 Chassis Overview

The TX809 is a conventional NTSC analog color television chassis that incorporates many of the latest video features. The TX809 has both front and rear composite video (CV) and audio inputs. The chassis also features a rear Y/C (S-Video) input that provides maximum quality video reproduction. The Sound/Pix IF IC (II60) provides the composite video signal. The video/deflection processing IC (IV01) is responsible for final processing of the video signal. The RGB OSD (on-screen-display) is also input to IV01 and overlaid onto the video signal. IV01 also provides contrast, brightness, tint and color controls.

The TX809 system control microcomputer IG401 is located in the Gemstar module and controls and monitors the operation of the instrument via two (2) I^2C buss. The I^2C1 bus reads and writes operational data (customer and factory settings, etc.) to and from the EEPROM, IR01. The second bus (I^2C2) provides control to all other areas of the chassis. The system control micro also monitors the keyboard and decodes the IR input from the remote control. The I2C2 bus is also applied to the bus expander IR501 where additional control signals for the chassis is generated.

The Sound/Pix IF IC (II60) provides the wide band audio signal. The audio circuit consists of four (4) major IC's, they are the stereo Decoder/Demultiplexor IC (IA002), an internal and external power amplifer IC's (IA502 / IA003) and the audio compressor (IA001). The Audio Compressor generates a control signal that is fed back to the system control micro to limit severe and sudden unwanted audio level changes.

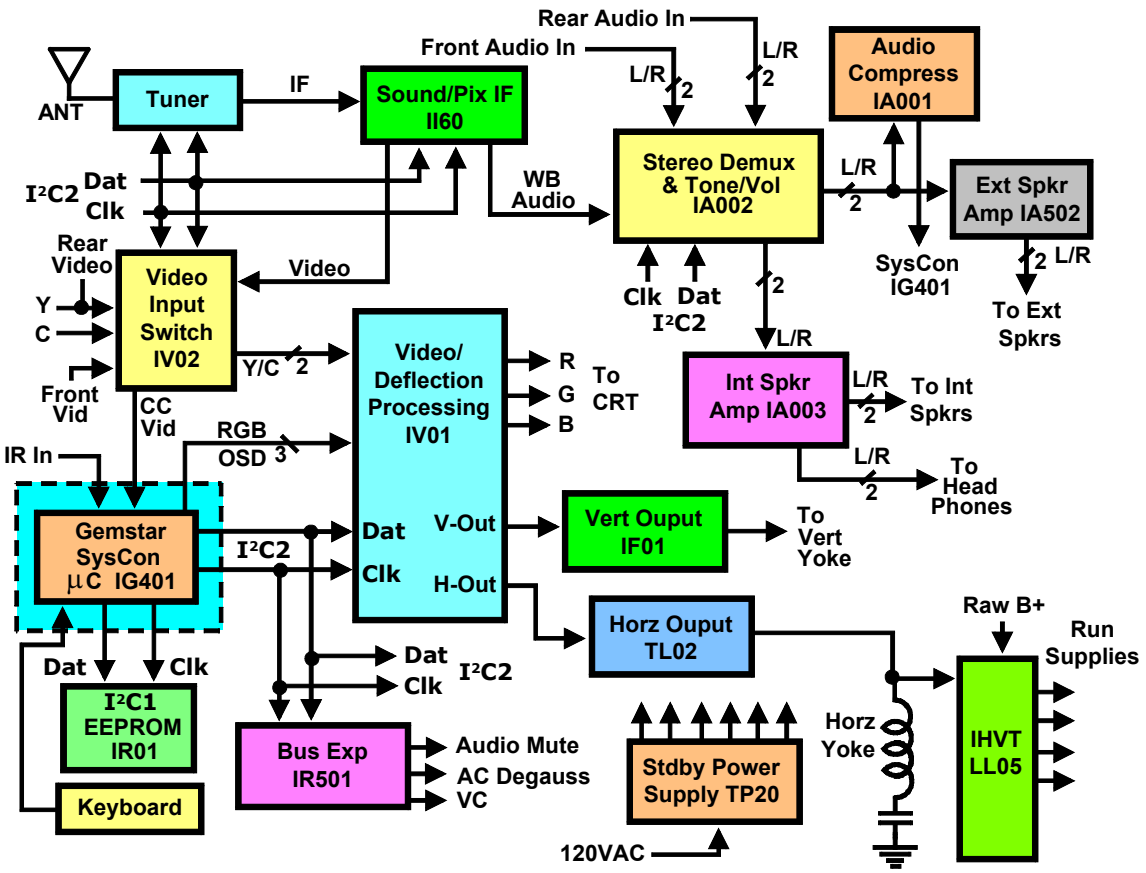

TX809 Simplified Block Diagram

The standby power supply is a conventional switch mode power supply. The standby supply is on whenever the instrument is plugged into 120VAC. The run supplies are only on when the set is running and are generated via a conventional horizontal scan-derived configuration. The voltages developed by both the standby and run supplies can vary depending upon the model and it's features. The video/deflection processing IC (IV01) also generates both the horizontal and vertical drive signals that are applied to the vertical and horizontal drive circuits.

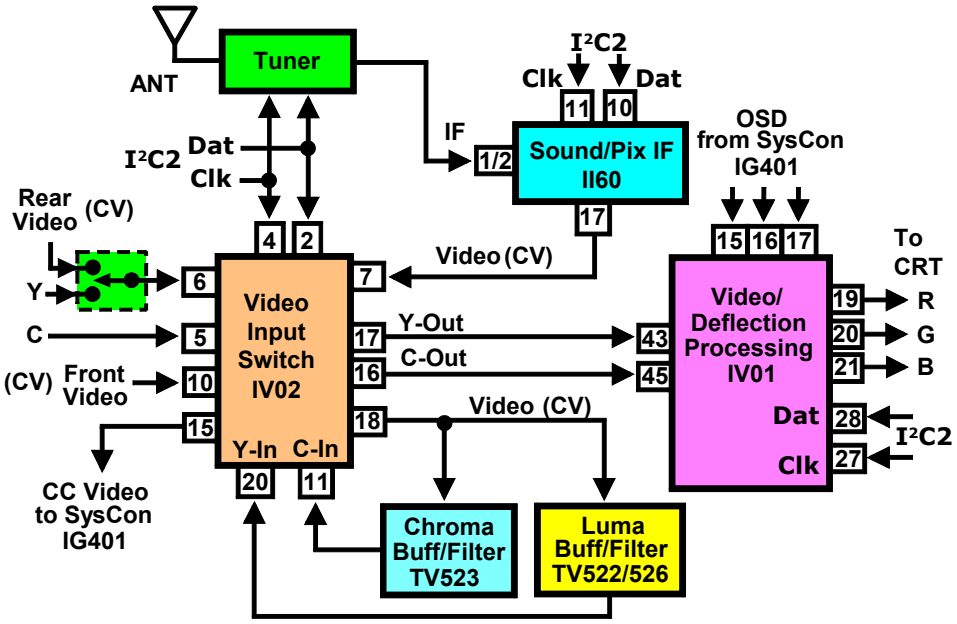

TX809 Video Switching/Processing Block Diagram

Video Switching & Processing

The Video Switching and Processing circuitry in the TX809 includes the Video Input Switch IV02, the Video/Deflection Processing IC IV01, the Sound/Pix IF IC II60 and the tuner. The video switch IV02, video/deflection IC IV01 processor and the sound/pix IC II60 are controlled via the System Control IG401. The CC Video (Closed Caption) is output from pin 15 of switch IV02 and sent to the system control (IG401) for decoding. Transistors TV522, TV523 and TV526 are used to separate the composite video signals into separate luma (Y) and chroma (C) signals. The composite video (CV) from the Sound/Pix IF (II60) and the front and rear input jacks are first routed through IV02 and output at pin 18. The composite video is applied to chroma and luma filter circuits for separation. The separated Y & C are then input back into IV01 at pins 11 and 20. The Y/C (S-Video) input is routed directly through switch IV02 for final processing. The selected video is output at pin 16 and 17 and applied to pins 43 and 45 of IV01 for final processing. All brightness, contrast, color and tint adjustments are performed by the video processor (IV01). The RGB OSD (On-Screen-Display) from the system control IG401 is also input to the video processor at pins 15, 16 & 17.

Troubleshooting

NOTE: Always use known video source such as color bars. If a video problem is suspected perform the following:

1. Confirm presence of all power supplies for circuit.
2. Check I^2C2 for data & clock activity when a function is selected.
3. Check for video from II60-17 (Sound/Pix IF) during tuner operation.
4. Apply video to front/rear video inputs and check for video at IV01-18.
5. If OK, check for Y & C out of transistors TV522, TV523 & TV526.
6. If OK, check for Y & C at IV02-16/17.
7. Check for correct RGB out of IV01-19/20/21 (Video Processor).

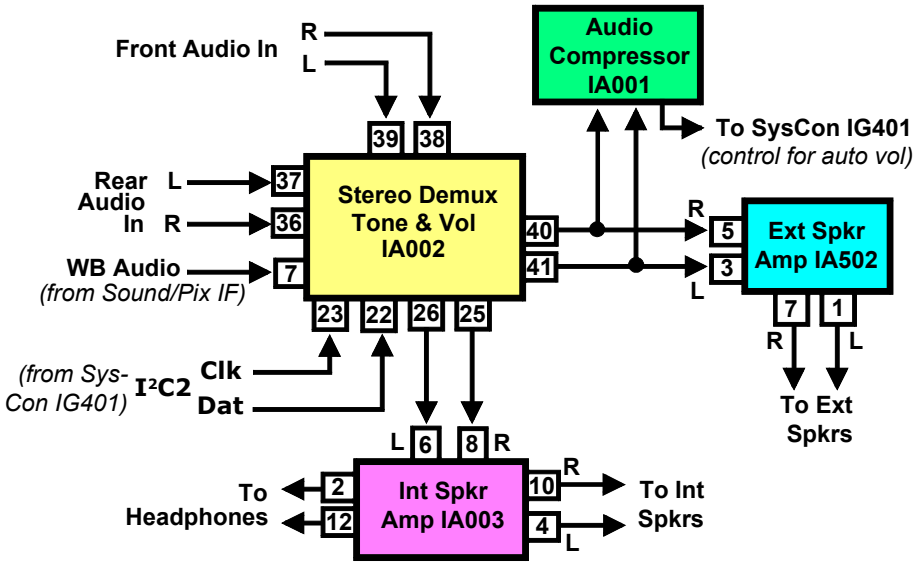

TX809 Audio Processing Block Diagram

Audio Processing

The TX809 audio circuit is comprised of a Stereo De-Multiplexor (IA002) and two (2) amplifier IC's, IA003 and IA502. IA002 is responsible for decoding the stereo signal into left and right channels and also provides for tone and volume control. Amplifier IA003 drives the internal speakers while IA502 provides drive for the external speakers. IA003 also has an output for the headphones. The stereo de-multiplexor is controlled by the System Control uC, IG401 via the I^2C2 bus. The wide band (WB) audio from the Sound/Pix IF is input to IA002 pin 7. The front and rear audio inputs are applied directly to IA002 pins 36 through 39. All switching and signal selection are accomplished in IA002 via control from the I^2C2 bus. The sound compressor (IA001) serves to compress the audio dynamic range by minimizing any sudden and undesirable changes in audio level. The output from the Sound Compressor is a DC control signal that is applied back to the system control IC, IG401. IG401 then communicates the desired changes back to IA002 via the I^2C2 bus.

Troubleshooting

If an audio problem is suspected check the following:

1. Check for audio power supplies to audio circuits.
2. Confirm speakers are not shorted or open.
3. If problem appears to be stereo related, inject stereo signal (from generator) into pin 7 of IA002 and check signal path.
4. If problem is external input related, inject know mono audio signal and check signal path.